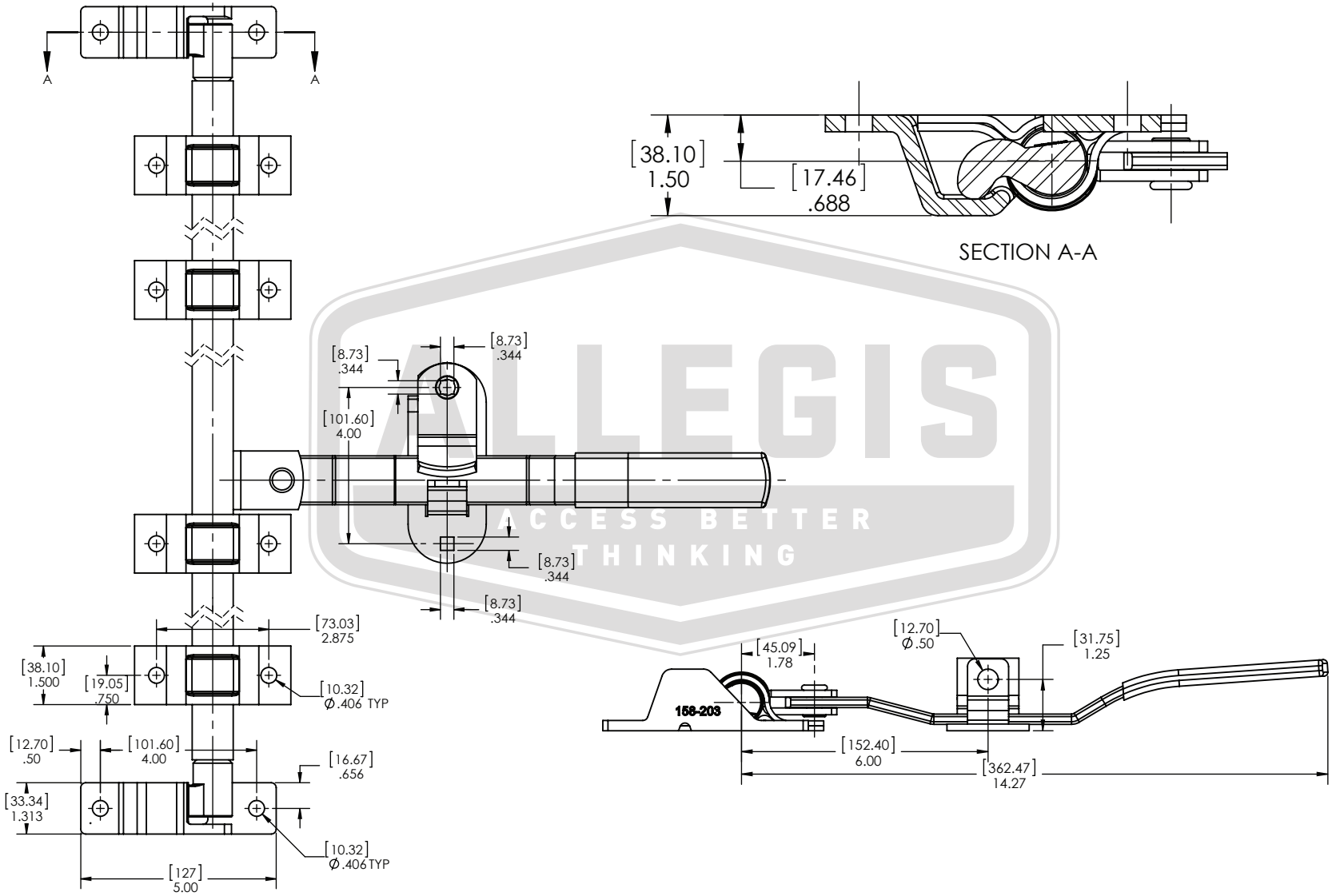

ALLEGIS
ACCESS BETTER THINKING

www.allegiscorp.com *1-866-378-7550*			MATERIAL / FINISH : Stainless Steel 304 or Zinc	
REV. : Rev. 2	SCALE :	DATE : 4-15-2025	DESCRIPTION : Bar Lock Kit	DRAWING NO. : 158 SS / 158 ZN