Non-Locking

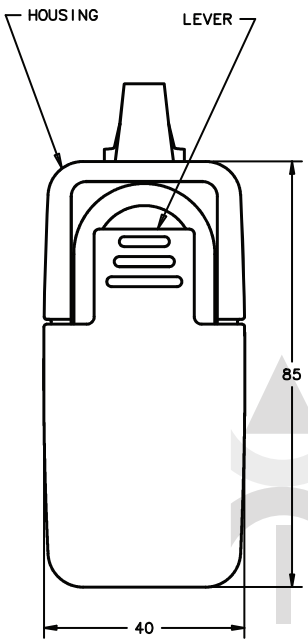

Key-Locking

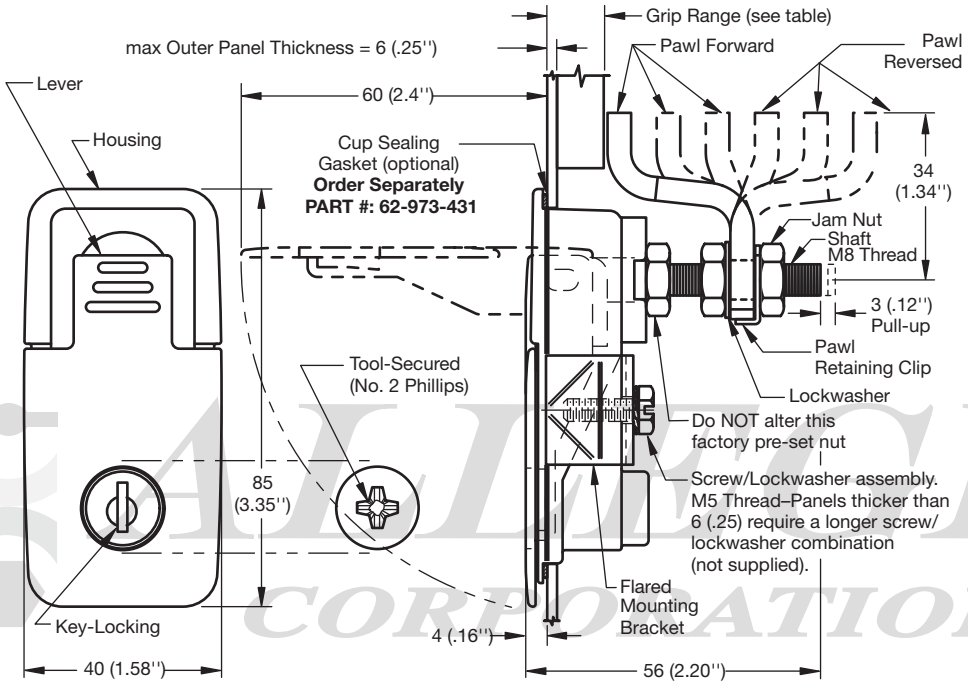

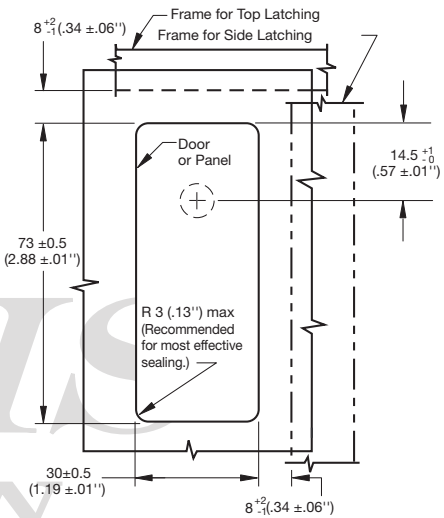

ALLEGIS CORPORATION

Part Number				Grip Range		
				Cam Forward	Cam Reversed	
Style	Textured Chrome	Black Powder	Polished Chrome	Min - Max	Min - Max	Sealing Note
Non-Locking	62-40-101	62-40-151	62-40-111	6 (.23") - 16 (.63")	56 (2.20") - 66 (2.59")	NEMA 4 / IP-66 sealing is achieved by using the environmental CUP SEALING GASKET and sealing the mounting screw threads with a such as an anaerobic sealant.
	62-40-201	62-40-251	62-40-211	16 (.63") - 26 (1.02")	46 (1.81") - 56 (2.20")	
	62-40-301	62-40-351	62-40-311	26 (1.02") - 36 (1.41")	36 (1.41") - 46 (1.81")	
Key-Locking	62-42-101	62-42-151	62-42-111	6 (.23") - 16 (.63")	56 (2.20") - 66 (2.59")	
	62-42-201	62-42-251	62-42-211	16 (.63") - 26 (1.02")	46 (1.81") - 56 (2.20")	
	62-42-301	62-42-351	62-42-311	26 (1.02") - 36 (1.41")	36 (1.41") - 46 (1.81")	

www.ALLEGISCORP.com
1-866-378-7550

MATERIAL / FINISH : Black powder coated or Textured or Polished Chrome

REV. :	DATE :	DESCRIPTION :	DRAWING NO. :
1 : 1	4-10-2018	Lift & Turn	See Chart