APPROVAL - CUSTOMER NAME & SIGNATURE	DATE

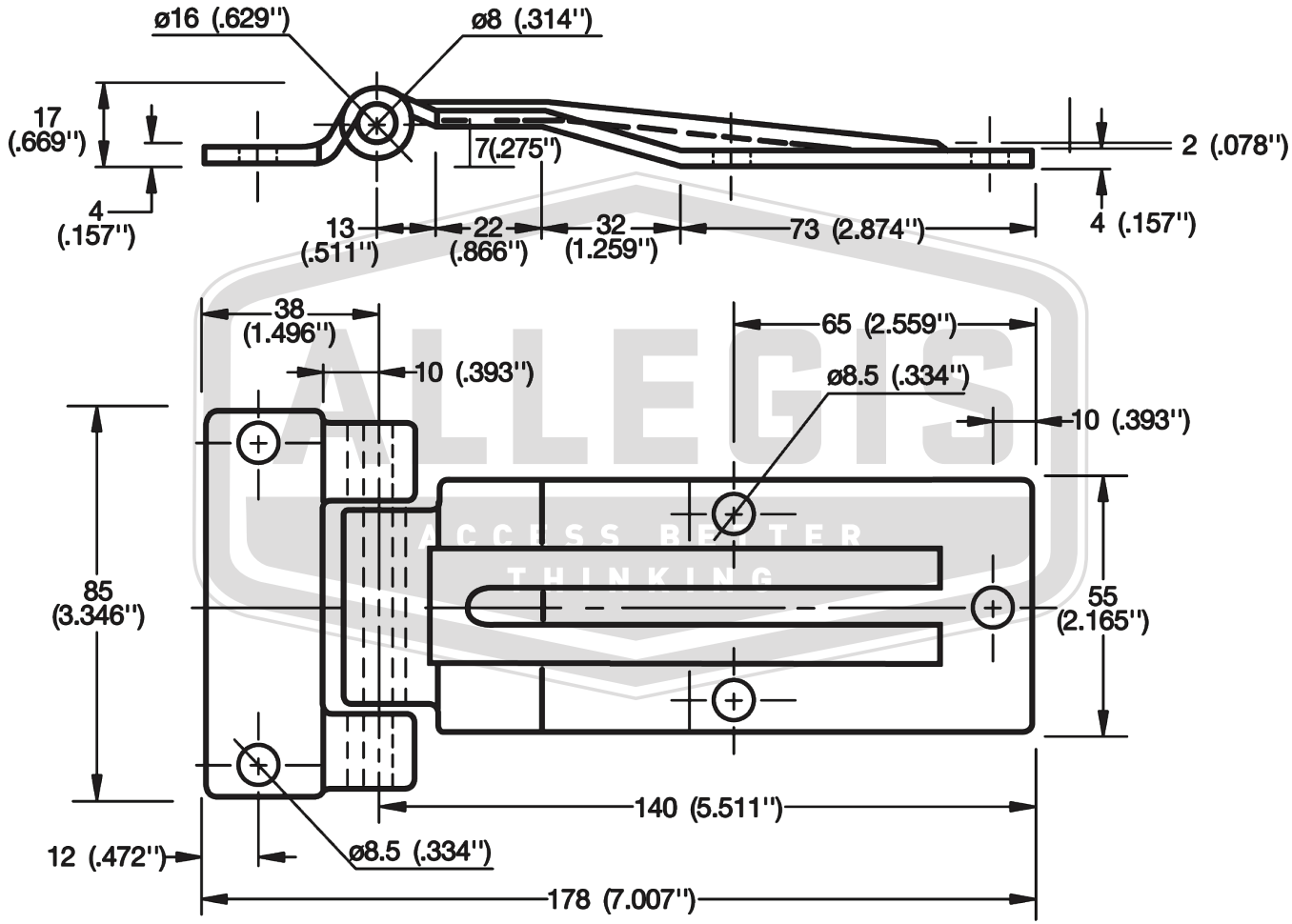

ALLEGIS	1-866-378-7550
MATERIAL: Stainless Steel	DRAWING NO.: 629
FINISH:	
REV.: 1:1	DATE: 6/12/2019