APPROVAL - CUSTOMER NAME & SIGNATURE	DATE

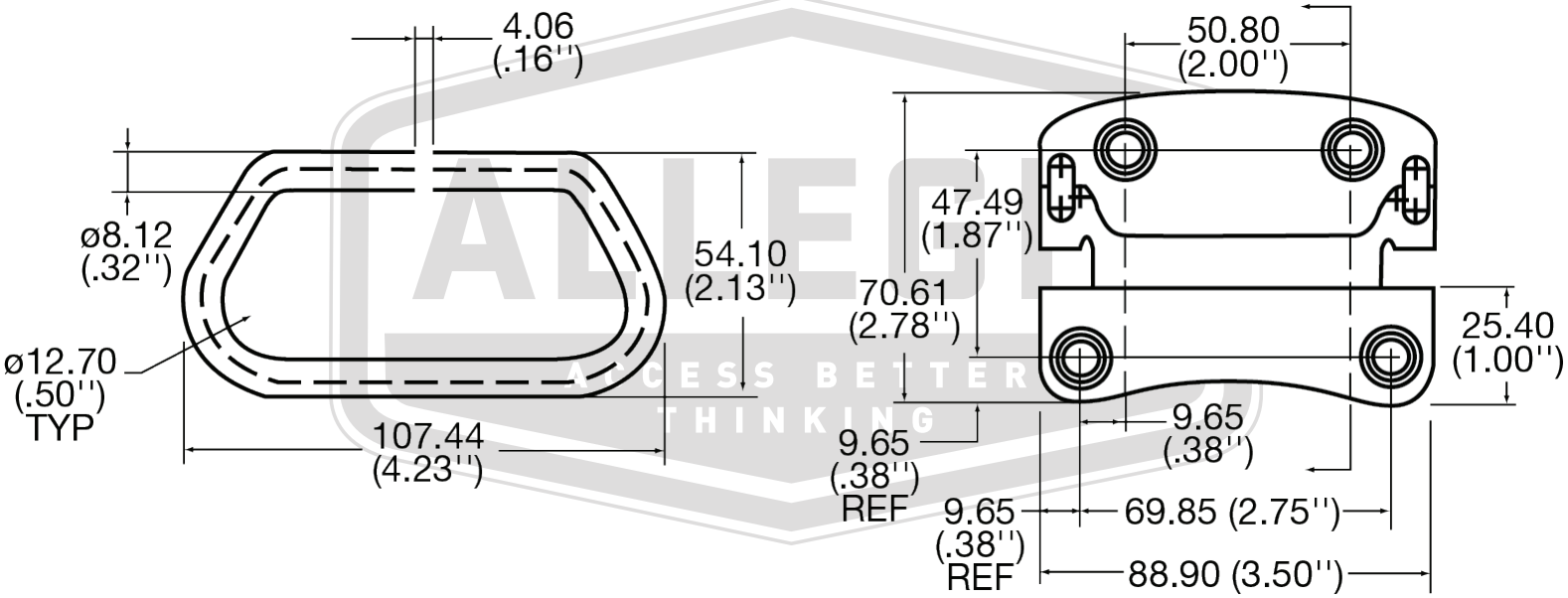

ALLEGIS	1-866-378-7550
MATERIAL: Zinc	DRAWING NO.: CH 1
FINISH:	
REV.: 1:1	DATE: 6/13/2019